CS6N70 A3D1-G

General Description:

CS6N70 A3D1-G, the silicon N-channel Enhanced VDMOSFETs, is obtained by the self-aligned planar Technology which reduce the conduction loss, improve switching performance and enhance the avalanche energy. The transistor can be used in various power switching circuit for system miniaturization and higher efficiency. The package form is TO-251, which accords with the RoHS standard.

V_{DSS}	700	V
I_D	6	A
$P_D(T_C=25℃)$	100	W
$R_{DS(ON)Typ}$	1.5	Ω

TO-251

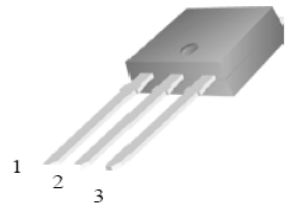

1.Gate 2.Drain 3.Source

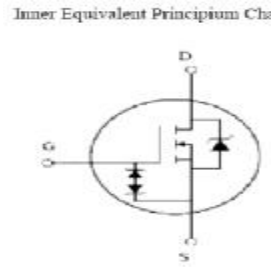

Features:

- **Fast Switching**
- **ESD Improved Capability**
- **Low Gate Charge (Typical Data:21nC)**
- **Low Reverse transfer capacitances(Typical:5pF)**
- **100% Single Pulse avalanche energy Test**

Applications:

Power switch circuit of adaptor and charger.

Absolute（Tc= 25℃ unless otherwise specified）:

Symbol	Parameter	Rating	Units
V_{DSS}	Drain-to-Source Voltage	700	V
I_D	Continuous Drain Current	6	A
	Continuous Drain Current T_C = 100 °C	3.6	A
I_{DM} a1	Pulsed Drain Current	24	A
V_{GS}	Gate-to-Source Voltage	±30	V
E_{AS} a2	Single Pulse Avalanche Energy	100	mJ
E_{AR} a1	Avalanche Energy ,Repetitive	15	mJ
I_{AR} a1	Avalanche Current	1.7	A
dv/dt a3	Peak Diode Recovery dv/dt	5.0	V/ns
P_D	Power Dissipation	100	W
	Derating Factor above 25°C	0.80	W/℃
$V_{ESD(G-S)}$	Gate source ESD (HBM-C= 100pF, R=1.5kΩ)	3000	V
T_J，T_{stg}	Operating Junction and Storage Temperature Range	150，–55 to 150	℃
T_L	Maximum Temperature for Soldering	300	℃

Electrical Characteristics（Tc= 25℃ unless otherwise specified）:

OFF Characteristics						
Symbol	Parameter	Test Conditions	Rating			Units
			Min.	Typ.	Max.	
V_{DSS}	Drain to Source Breakdown Voltage	V_{GS}=0V, I_D=250μA	700	--	--	V
$\Delta BV_{DSS}/\Delta T_J$	Bvdss Temperature Coefficient	ID=250uA,Reference25℃	--	0.74	--	V/℃
I_{DSS}	Drain to Source Leakage Current	V_{DS} = 700V, V_{GS}= 0V, T_a = 25℃	--	--	10	μA
		V_{DS} =560V, V_{GS}= 0V, T_a = 125℃	--	--	100	
$I_{GSS(F)}$	Gate to Source Forward Leakage	V_{GS} =+20V	--	--	10	μA
$I_{GSS(R)}$	Gate to Source Reverse Leakage	V_{GS} =-20V	--	--	-10	μA

ON Characteristics						
Symbol	Parameter	Test Conditions	Rating			Units
			Min.	Typ.	Max.	
$R_{DS(ON)}$	Drain-to-Source On-Resistance	V_{GS}=10V,I_D=3A	--	1.5	1.8	Ω
$V_{GS(TH)}$	Gate Threshold Voltage	V_{DS} = V_{GS}, I_D = 250μA	2.0		4.0	V
Pulse width tp≤300μs,δ≤2%						

Dynamic Characteristics						
Symbol	Parameter	Test Conditions	Rating			Units
			Min.	Typ.	Max.	
g_{fs}	Forward Trans conductance	V_{DS}=15V, I_D =3A	--	5.0	--	S
C_{iss}	Input Capacitance	V_{GS} = 0V V_{DS} = 25V f = 1.0MHz	--	1075	--	pF
C_{oss}	Output Capacitance		--	84	--	
C_{rss}	Reverse Transfer Capacitance		--	5	--	

Resistive Switching Characteristics						
Symbol	Parameter	Test Conditions	Rating			Units
			Min.	Typ.	Max.	
$t_{d(ON)}$	Turn-on Delay Time	I_D =6.0A V_{DD} = 350V V_{GS} = 10V R_G =25Ω	--	16	--	ns
tr	Rise Time		--	19	--	
$t_{d(OFF)}$	Turn-Off Delay Time		--	50	--	
t_f	Fall Time		--	26	--	
Q_g	Total Gate Charge	I_D =6.0A V_{DD} =350V V_{GS} = 10V	--	21		nC
Q_{gs}	Gate to Source Charge		--	5	--	
Q_{gd}	Gate to Drain (“Miller”)Charge		--	6.5	--	

Source-Drain Diode Characteristics						
Symbol	Parameter	Test Conditions	Rating			Units
			Min.	Typ.	Max.	
I_S	Continuous Source Current (Body Diode)		--	--	6	A
I_{SM}	Maximum Pulsed Current (Body Diode)		--	--	24	A
V_{SD}	Diode Forward Voltage	I_S=6.0A,V_{GS}=0V	--	--	1.5	V
trr	Reverse Recovery Time	I_S=6.0A,T_j = 25°C	--	212	--	ns
Qrr	Reverse Recovery Charge	dI_F/dt=100A/us, V_{GS}=0V	--	1078	--	nC
Pulse width tp≤300μs,δ≤2%						

Symbol	Parameter	Typ.	Units
$R_{\theta JC}$	Junction-to-Case	1.25	℃/W
$R_{\theta JA}$	Junction-to-Ambient	62	℃/W

Gate-source Zener diode						
Symbol	Parameter	Test Conditions	Rating			Units
			Min.	Typ.	Max.	
V_{GSO}	Gate-source breakdown voltage	I_{GS}= ±1mA(Open Drain)	30			V
The built-in back-to-back Zener diodes have specifically been designed to enhance not only the device's ESD capability, but also to make them safely absorb possible voltage transients that may occasionally be applied from gate to source. In this respect the Zener voltage is appropriate to achieve an efficient and cost-effective intervention to protect the device's integrity. These integrated Zener diodes thus avoid the usage of external components.						

[a1]: Repetitive rating; pulse width limited by maximum junction temperature
[a2]: L=10.0mH, I_D=4.5A, Start T_J=25℃
[a3]: I_{SD} =6A,di/dt ≤100A/us,V_{DD}≤$BV_{DS,}$ Start T_J=25℃

Characteristics Curve:

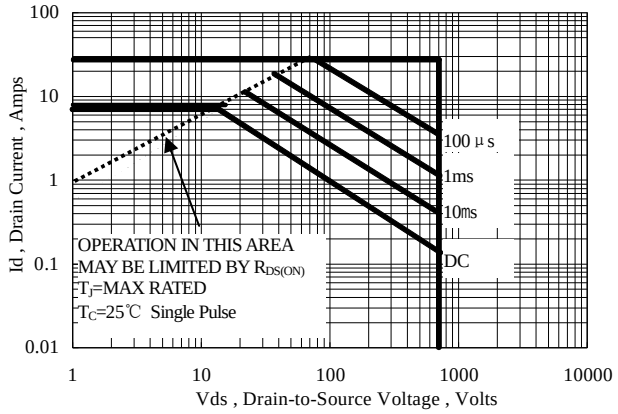

Figure 1 Maximum Forward Bias Safe Operating Area

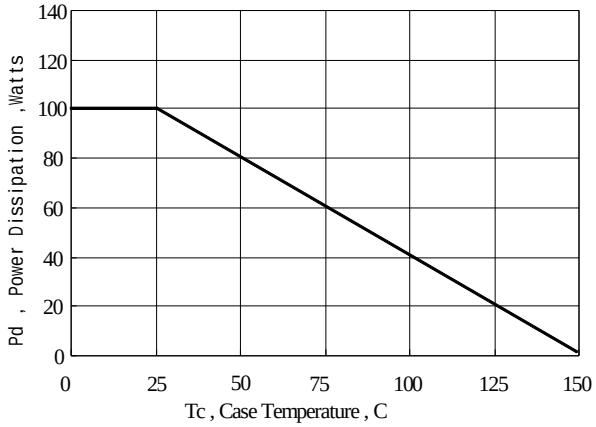

Figure 2 Maximum Power Dissipation vs Case Temperature

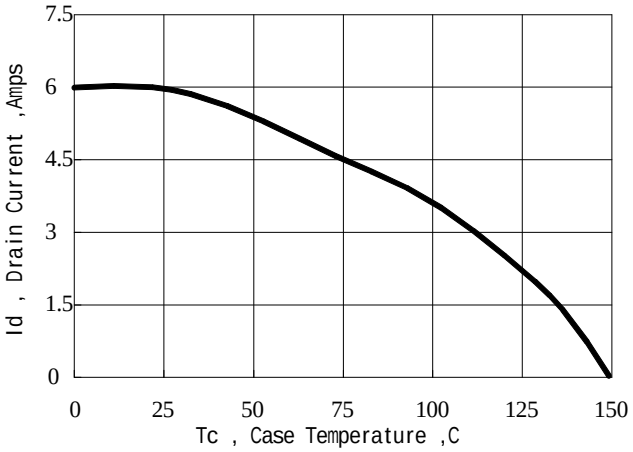

Figure 3 Maximum Continuous Drain Current vs Case Temperature

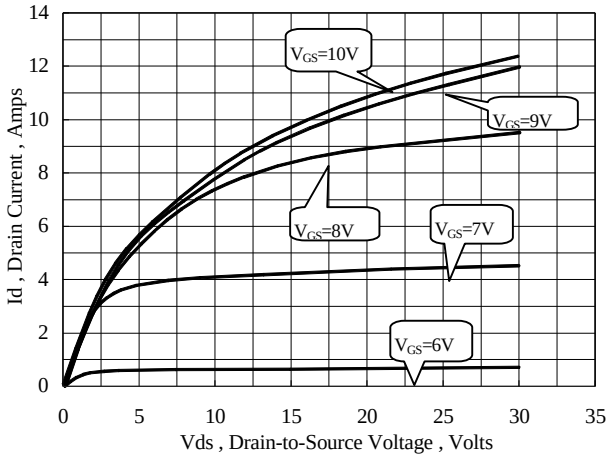

Figure 4 Typical Output Characteristics

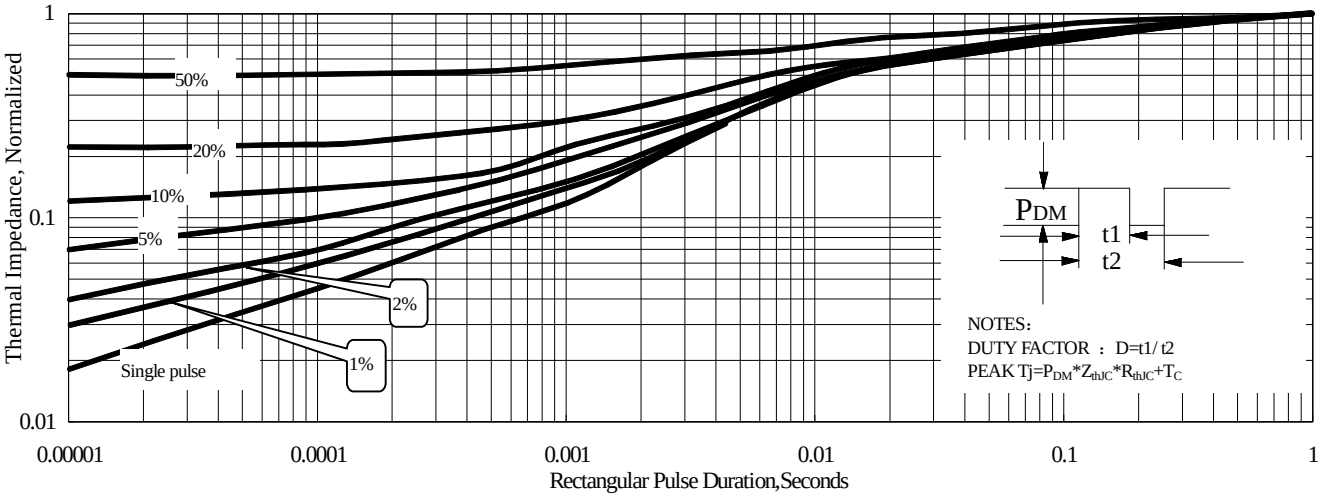

Figure 5 Maximum Effective Thermal Impendance , Junction to Case

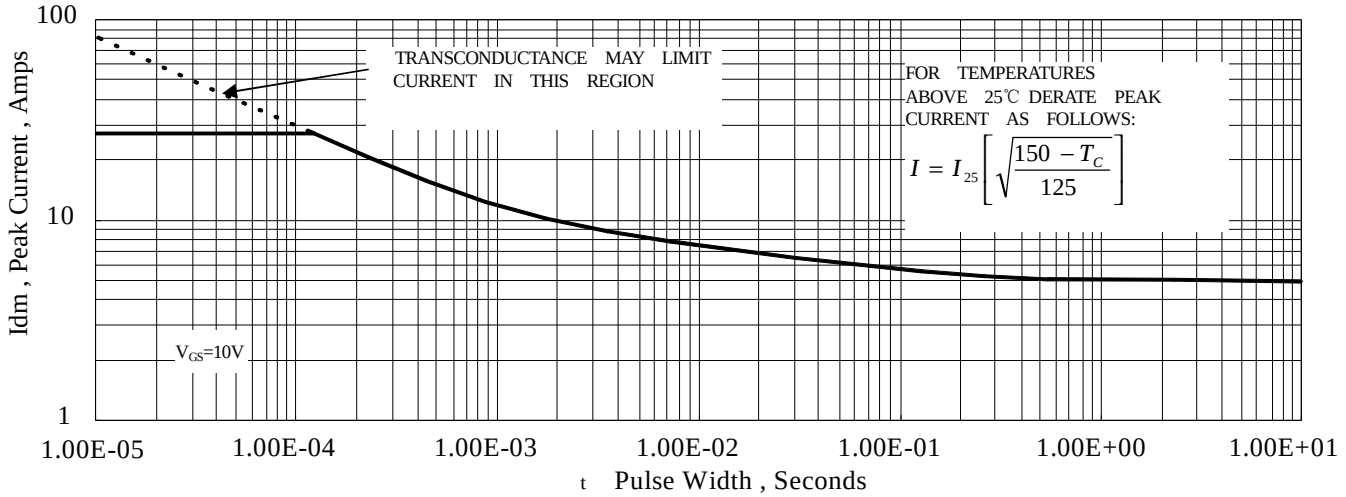

Figure 6 Maximum Peak Current Capability

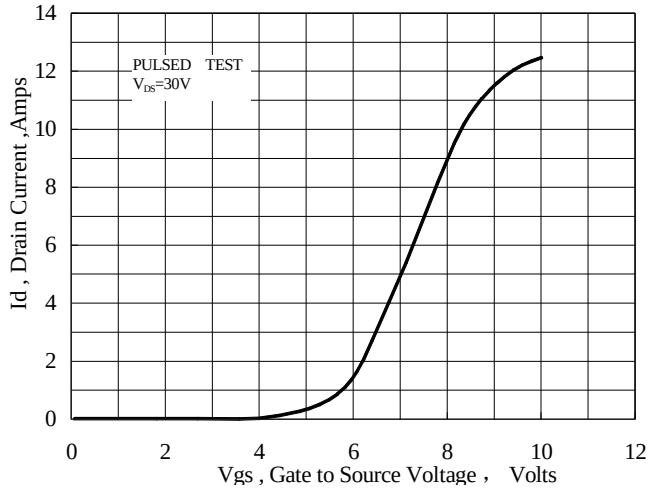

Figure 7 Typical Transfer Characteristics

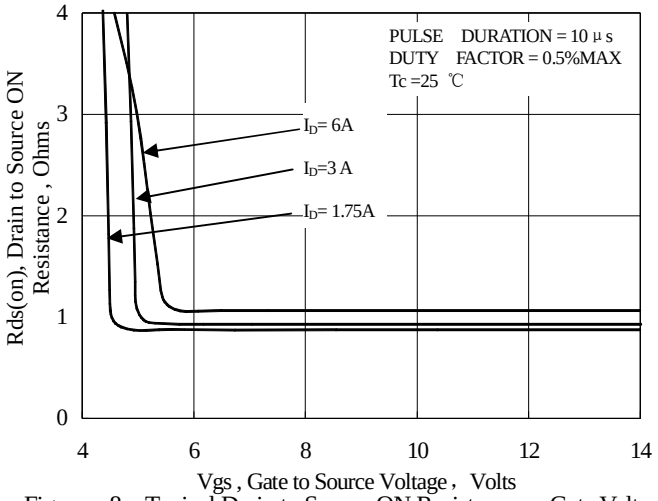

Figure 8 Typical Drain to Source ON Resistance vs Gate Voltage and Drain Current

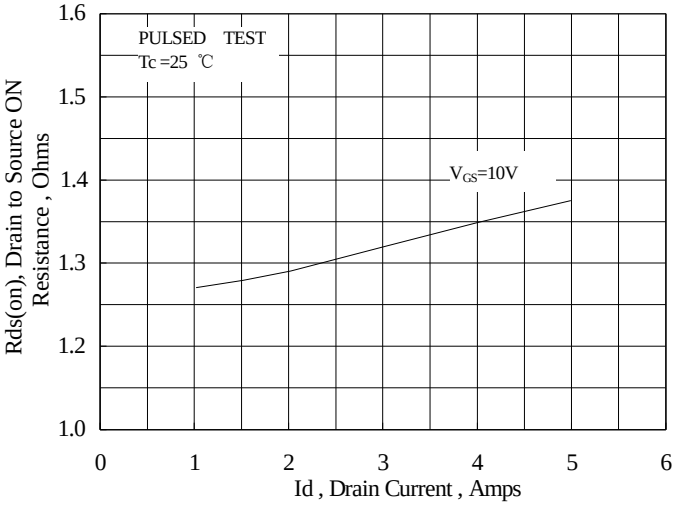

Figure 9 Typical Drain to Source ON Resistance vs Drain Current

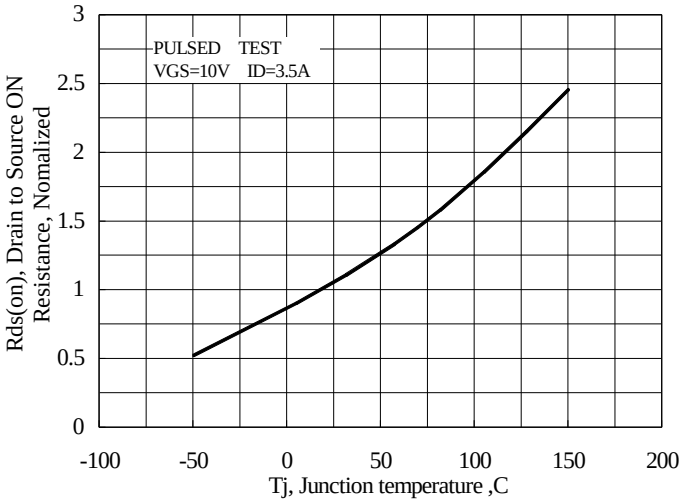

Figure 10 Typical Drian to Source on Resistance vs Junction Temperature

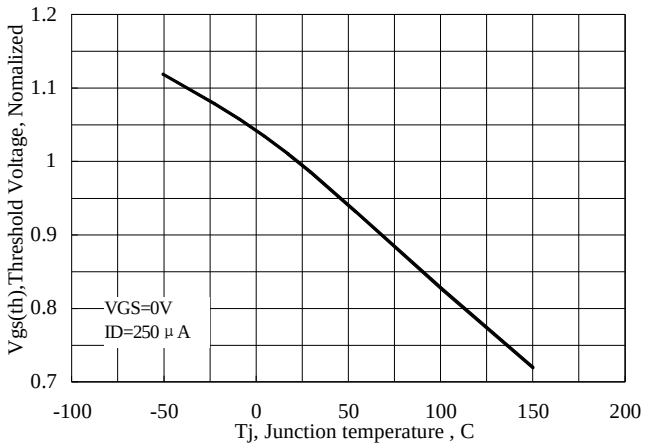

Figure 11 Typical Theshold Voltage vs Junction Temperature

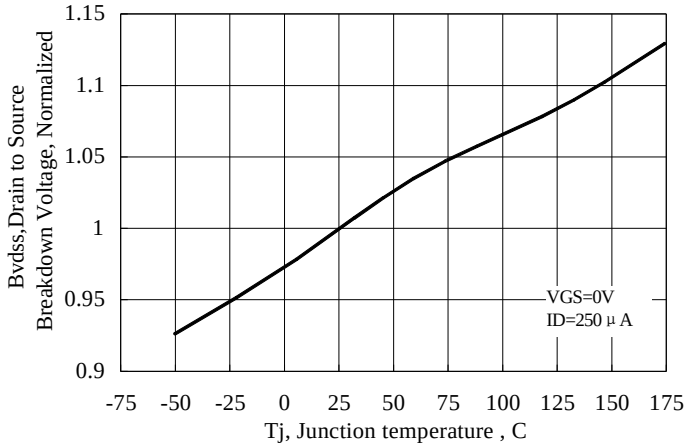

Figure 12 Typical Breakdown Voltage vs Junction Temperature

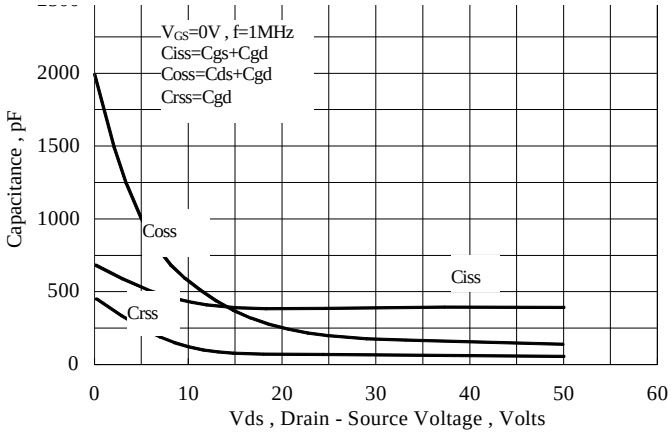

Figure 13 Typical Capacitance vs Drain to Source Voltage

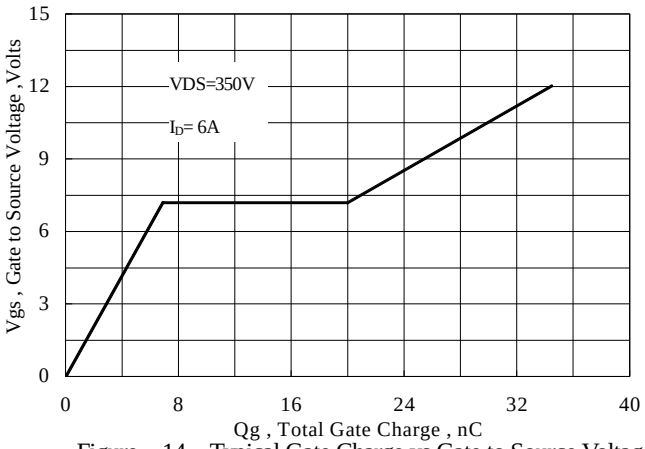

Figure 14 Typical Gate Charge vs Gate to Source Voltage

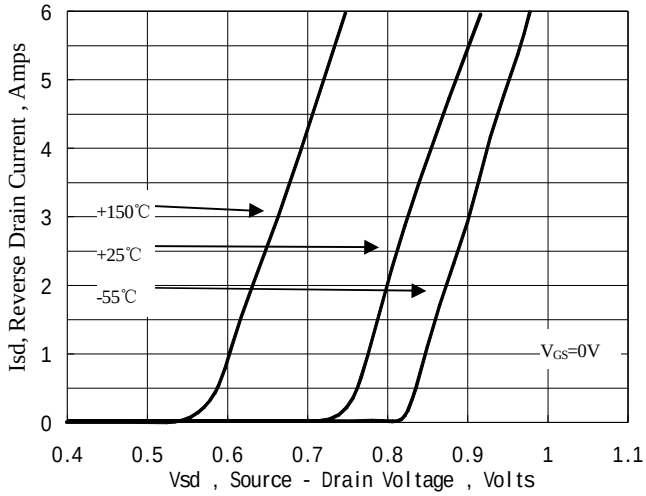

Figure 15 Typical Body Diode Transfer Characteristics

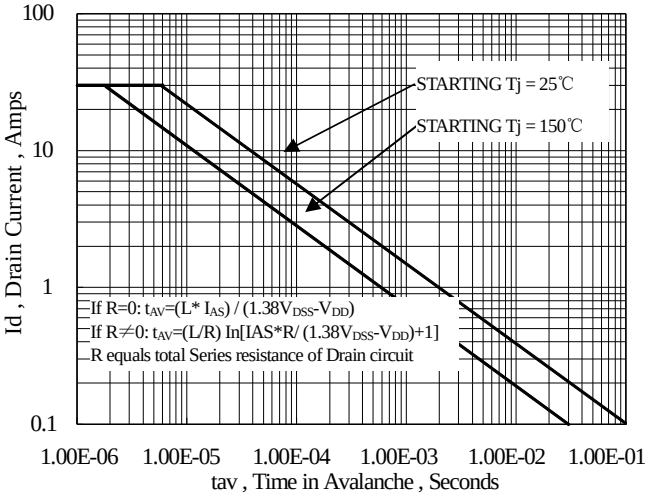

Figure 16 Unclamped Inductive Switching Capability

Test Circuit and Waveform

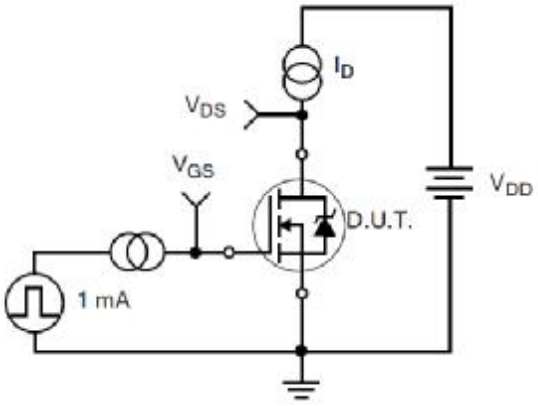

Figure 17. Gate Charge Test Circuit

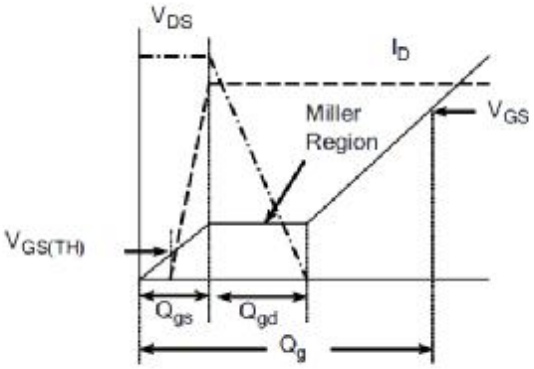

Figure 18. Gate Charge Waveform

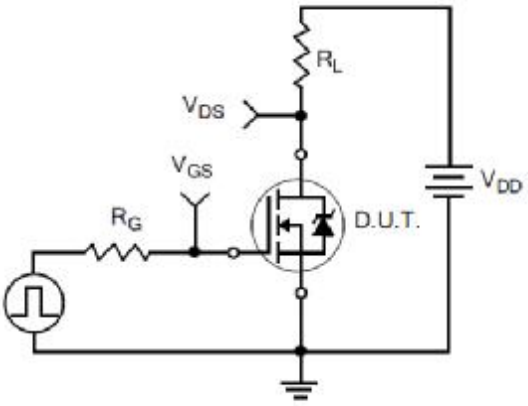

Figure 19. Resistive Switching Test Circuit

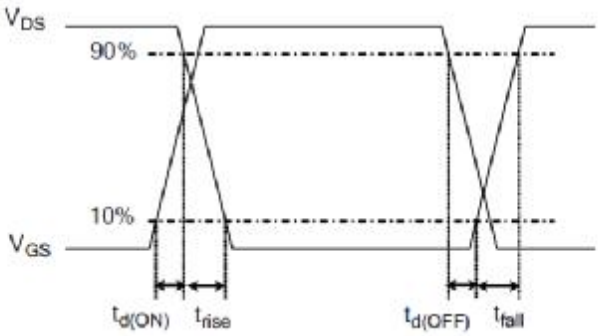

Figure 20. Resistive Switching Waveforms

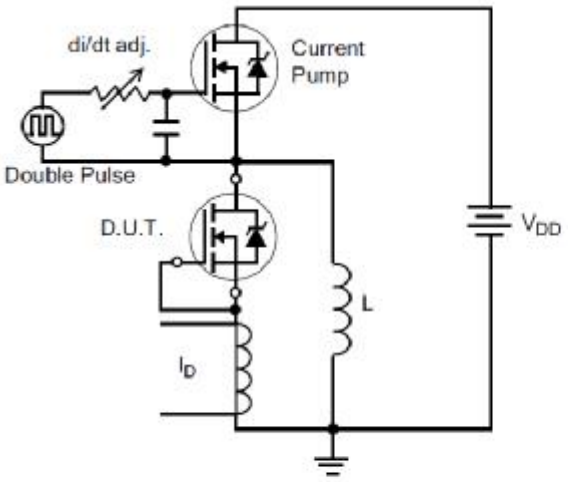

Figure 21. Diode Reverse Recovery Test Circuit

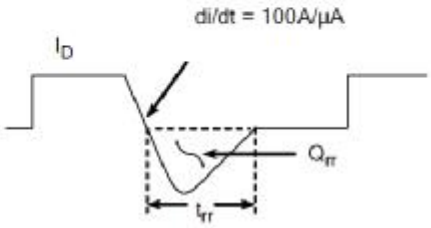

Figure 22. Diode Reverse Recovery Waveform

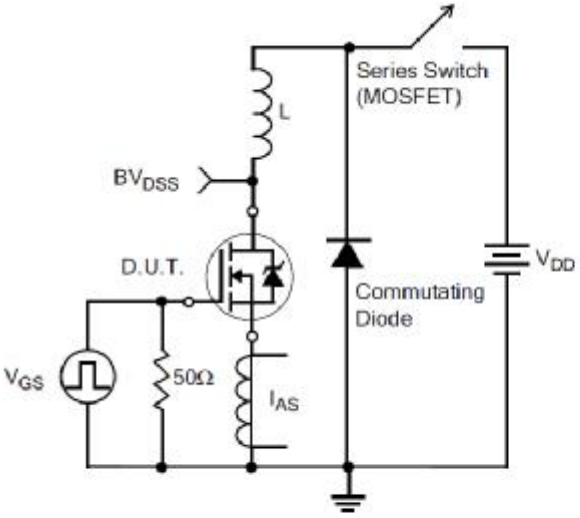

Figure 23. Unclamped Inductive Switching Test Circuit

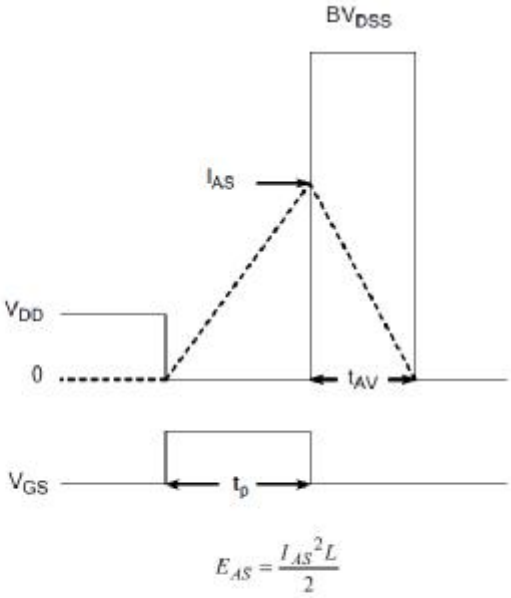

Figure 24. Unclamped Inductive Switching Waveforms

Package Information

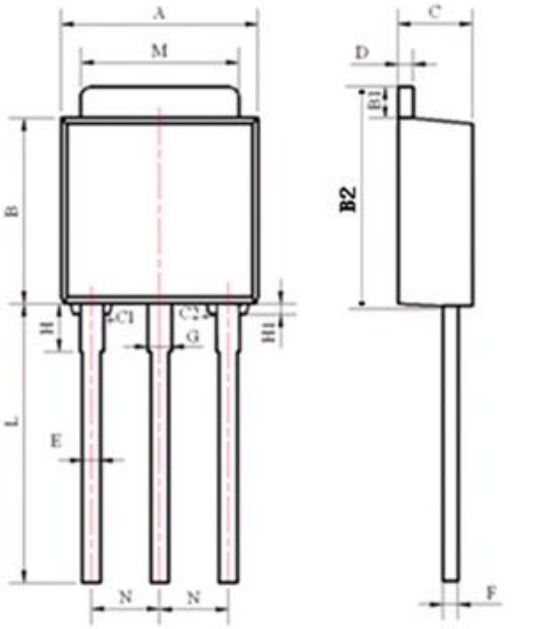

Items	Values(mm)	
	MIN	MAX
A	6.30	6.90
B	5.70	6.40
B1	1.00	1.20
B2	6.90	7.30
C	2.10	2.50
C1	0.20	0.40
C2	0.30	0.50
D	0.30	0.60
E	0.50	0.70
F	0.30	0.60
G	0.70	1.00
H	1.60	2.40
H1	0.30	0.40
L	7.50	9.80
	2.10	2.90
M	5.10	5.50
N	2.09	2.49

TO-251 Package

The name and content of poisonous and harmful material in products

Part's Name	Hazardous Substance					
	Pb	Hg	Cd	Cr(VI)	PBB	PBDE
Limit	≤0.1%	≤0.1%	≤0.01%	≤0.1%	≤0.1%	≤0.1%
Lead Frame	○	○	○	○	○	○
Molding Compound	○	○	○	○	○	○
Chip	○	○	○	○	○	○
Wire Bonding	○	○	○	○	○	○
Solder	×	○	○	○	○	○
Note	○: means the hazardous material is under the criterion of SJ/T11363-2006. ×: means the hazardous material exceeds the criterion of SJ/T11363-2006. The plumbum element of solder exist in products presently, but within the allowed range of Eurogroup's RoHS.					

Warnings

1. Exceeding the maximum ratings of the device in performance may cause damage to the device, even the permanent failure, which may affect the dependability of the machine. It is suggested to be used under 80 percent of the maximum ratings of the device.
2. When installing the heatsink, please pay attention to the torsional moment and the smoothness of the heatsink.
3. VDMOSFETs is the device which is sensitive to the static electricity, it is necessary to protect the device from being damaged by the static electricity when using it.
4. This publication is made by Huajing Microelectronics and subject to regular change without notice.

WUXI CHINA RESOURCES HUAJING MICROELECTRONICS CO., LTD.

Add: No.14 Liangxi RD. Wuxi, Jiangsu, China Mail:214061 http://www. crhj.com.cn
Tel: +86 0510-85807228 Fax: +86- 0510-85800864

Marketing Part: Post: 214061 Tel: +86 0510-81805277/81805336
Fax: +86 0510-85800360/85803016
E-mail: sales@hj.crmicro.com

Application and Service: Post: 214061 Tel / Fax: +86- 0510-81805243/81805110