1200V 75A Trench FS Gen.7 IGBT

General Description

Using NCE's proprietary high density trench gate design and advanced FS (Field Stop) Gen.7 technology, the 1200V Trench FS Gen.7 IGBT offers superior conduction and switching performances, and easy parallel operation;

Features

- Trench Field Stop Gen.7 Technology Offering
- Low saturation voltage: V_{CEsat} = 1.65V(Typ.) @ IC = 75 A
- High speed switching，low switching losses
- Maximum junction temperature Tvjmax = 175°C
- Tighten parameter distribution
- High ruggedness, temperature stable behavior
- Pb-free lead plating; RoHS compliant

Application

- PV power
- Three-level Solar String Inverter
- UPS

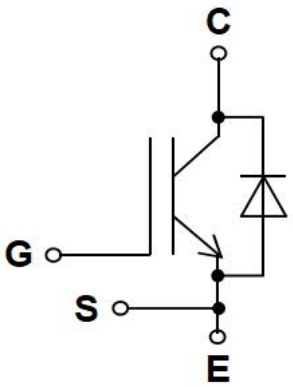

Schematic diagram

Package Marking and Ordering Information

Device	Device Package	Device Marking
NCE75ED120VT4	TO-247-4L	NCE75ED120VT4

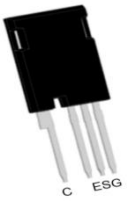

TO-247-4L

Absolute Maximum Ratings (T_C=25°C unless otherwise noted)

Symbol	Parameter	Value	Units
V_{CES}	Collector-Emitter Voltage	1200	V
V_{GES}	Gate- Emitter Voltage	±30	V
I_C	Collector Current	150	A
	Collector Current @T_C = 100 °C	75	A
I_{Cpuls}	Pulsed Collector Current，t_p limited by T_{jmax}	262	A
-	Turn off safe operating area，V_{CE}=1200V, T_j=175°C	262	A
I_F	Diode Continuous Forward Current @T_C = 100 °C	75	A
I_{FM}	Diode Maximum Forward Current	262	A
P_D	Power Dissipation @ T_C = 25°C	650	W
	Power Dissipation @T_C = 100 °C	325	W
T_{stg}	Storage Temperature	-55 to +150	°C
T_{vj}	Operating junction temperature	-40 to +175	°C
T_L	Maximum Temperature for Soldering	260	°C

Thermal Characteristic

Symbol	Parameter	Value	Units
$R_{\theta JC}$	Thermal Resistance, Junction to case for IGBT	0.23	°C/W
$R_{\theta JC}$	Thermal Resistance, Junction to case for Diode	0.43	°C/W
$R_{\theta JA}$	Thermal Resistance, Junction to Ambient	40	°C/W

Electrical Characteristics (T_C=25°C unless otherwise noted)

Symbol	Parameter	Conditions		Value			Units
				Min.	Typ.	Max.	
Static Characteristics							
$V_{(BR)CES}$	Collector-Emitter Breakdown Voltage	V_{GE}=0V,I_{CE}=3mA		1200	--	--	V
I_{CES}	Collector-Emitter Leakage Current	V_{GE}=0V,V_{CE}=1200V		--	--	20	uA
$I_{GES(F)}$	Gate to Emitter Forward Leakage	V_{GE}=+30V,V_{CE}=0V		--	--	100	nA
$I_{GES(R)}$	Gate to Emitter Reverse Leakage	V_{GE}=-30V,V_{CE} =0V		--	--	100	nA
$V_{CE(sat)}$	Collector-Emitter Saturation Voltage	I_C=40A	V_{GE}=15V，T_j=25°C	--	1.30	--	V
		I_C=75A		--	1.65	2.10	V
		I_C=40A	V_{GE}=15V，T_j=175°C	--	1.45	--	V
		I_C=75A		--	1.95	--	V
$V_{GE(th)}$	Gate Threshold Voltage	I_C=3mA,V_{CE}=V_{GE}		4.5	--	6.0	V
Dynamic Characteristics							
C_{ies}	Input Capacitance	V_{CE}=25V,V_{GE}=0V, f=1MHz		6100	7690	9300	pF
C_{oes}	Output Capacitance			--	169	--	
C_{res}	Reverse Transfer Capacitance			--	36	--	
Q_g	Total Gate Charge	V_{CC}=960V, I_C=75A, V_{GE}=15V		--	261	--	nC
Q_{ge}	Gate to Emitter Charge			--	28	--	
Q_{gc}	Gate to Collector Charge			--	124	--	
Rg	Internal Gate Resistance	f=1MHz		--	0.5	--	Ω
Switching Characteristics							
$t_{d(ON)}$	Turn-on Delay Time	V_{CC}=600V,I_C=75A, V_{GE}=0/15V, R_g=5.7Ω, Inductive Load		--	79	--	ns
t_r	Rise Time			--	55	--	
$t_{d(OFF)}$	Turn-Off Delay Time			--	276	--	
t_f	Fall Time			--	42	--	
E_{on}	Turn-On Switching Loss			--	3.55	--	mJ
E_{off}	Turn-Off Switching Loss			--	1.67	--	
E_{ts}	Total Switching Loss			--	5.22	--	
E_{on}	Turn-On Switching Loss	V_{CC}=600V,I_C=75A, V_{GE}=0/15V,R_g=5.7Ω, Inductive Load，T_j=175°C		--	4.94	--	mJ
E_{off}	Turn-Off Switching Loss			--	2.25	--	
E_{ts}	Total Switching Loss			--	7.19	--	

Electrical Characteristics of the Diode (T_C= 25°C unless otherwise specified)

Symbol	Parameter	Conditions		Rating			Units
				Min.	Typ.	Max.	
V_{FM}	Diode Forward Voltage	I_F=75A	T_j=25°C	--	2.9	3.5	V
			T_j=175°C	--	2.6	--	V
T_{rr}	Reverse Recovery Time	I_F=75A,R_g=5.7Ω, T_j=25°C		--	163	--	ns
I_{RRM}	Diode Peak Reverse Recovery Current			--	25	--	A
Q_{rr}	Reverse Recovery Charge			--	1.13	--	uC
E_{rec}	Reverse Recovery Energy			--	0.96	--	mJ
T_{rr}	Reverse Recovery Time	I_F=75A,R_g=5.7Ω, T_j=175°C		--	245	--	ns
I_{RRM}	Diode Peak Reverse Recovery Current			--	40	--	A
Q_{rr}	Reverse Recovery Charge			--	4.02	--	uC
E_{rec}	Reverse Recovery Energy			--	1.42	--	mJ

Note: For optimum lifetime and reliability, NCE recommends operating conditions that do not exceed 80% of the maximum ratings stated in this datasheet.

Test Circuit

1) Gate Charge Test Circuit

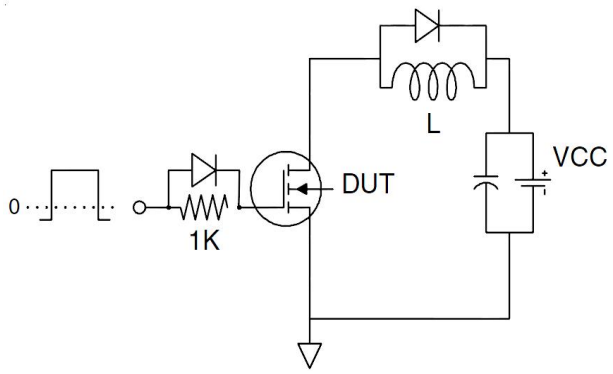

2) Switch Time Test Circuit

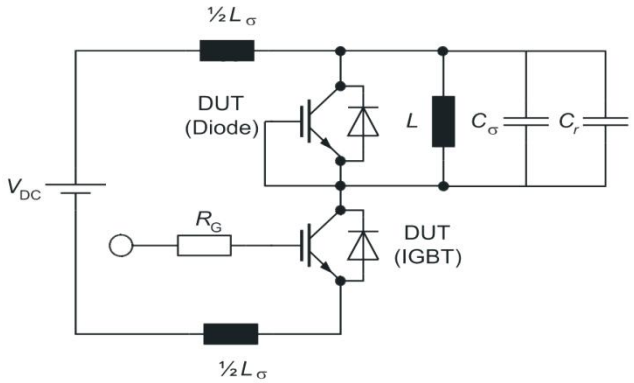

Switching characteristics

1) Definition of switching times

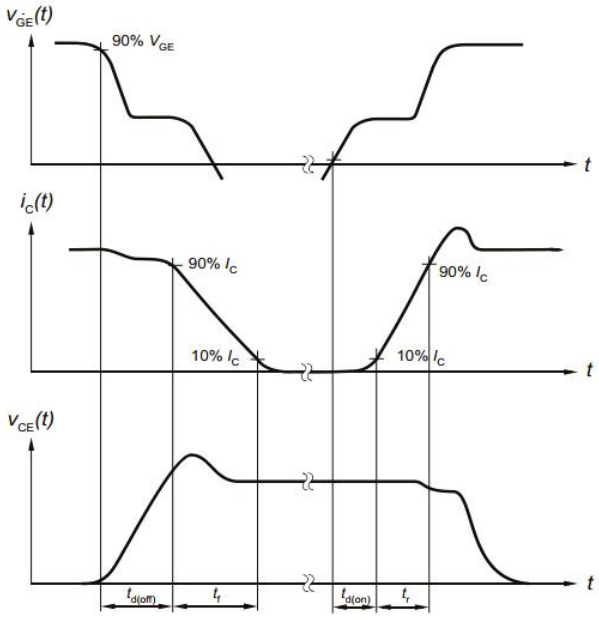

2) Definition of switching losses

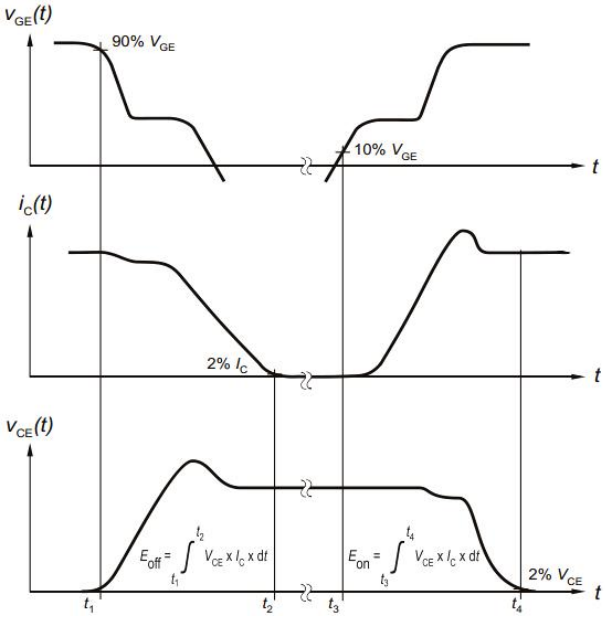

3) Definition of diode switching characteristics

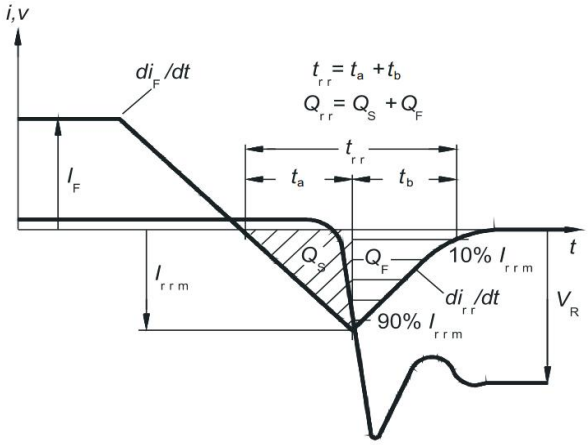

Typical Electrical and Thermal Characteristics

Figure 1 Output Characteristics

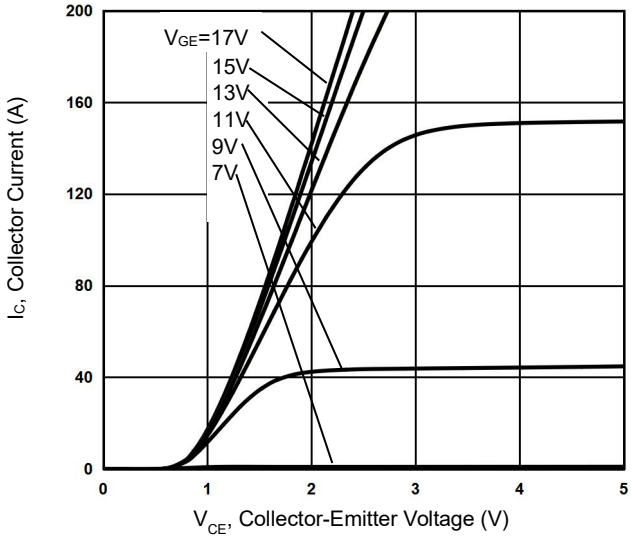

Figure 2 Transfer Characteristics

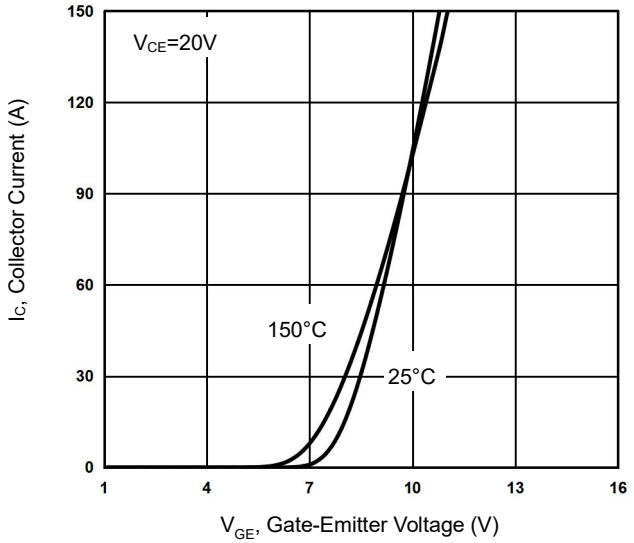

Figure 3 $V_{CE(sat)}$ vs. Temperature

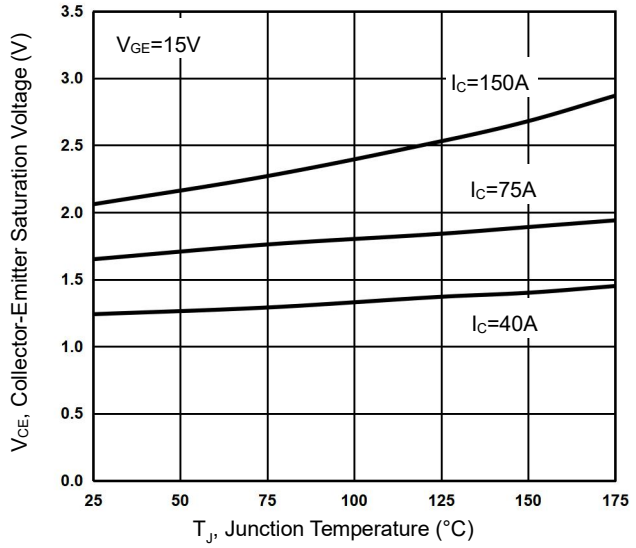

Figure 4 Saturation Voltage vs. V_{GE}

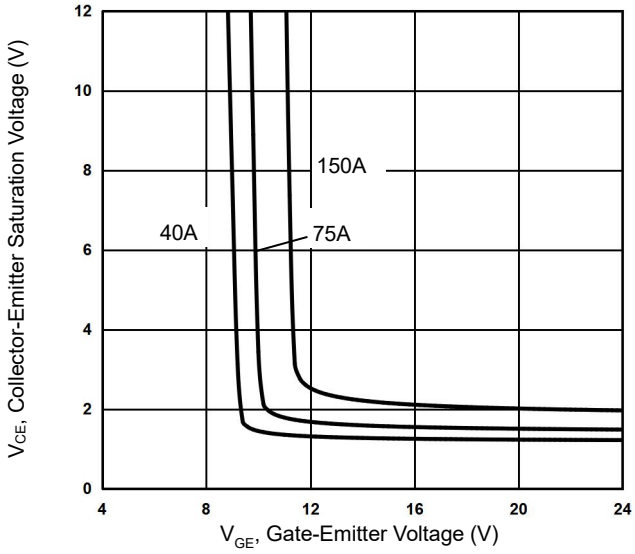

Figure 5 Capacitance Characteristics

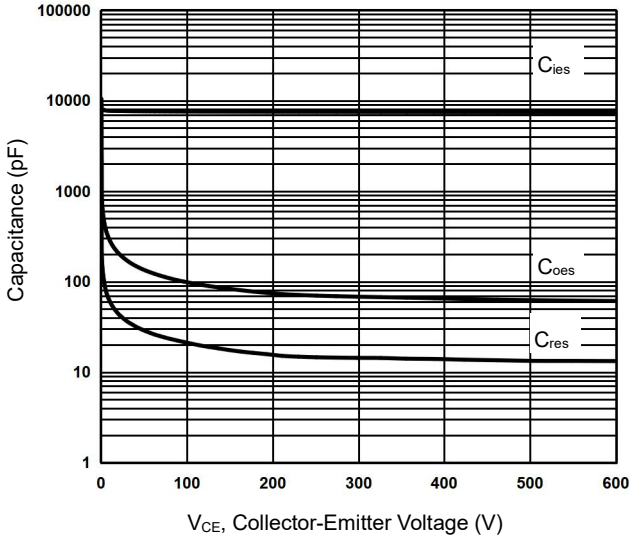

Figure 6 Gate Charge Wave Form

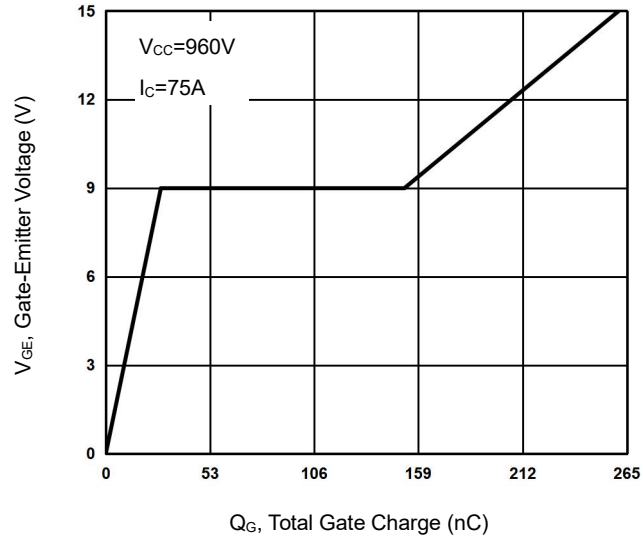

Typical Electrical and Thermal Characteristics

Figure 7 Forward Characteristics

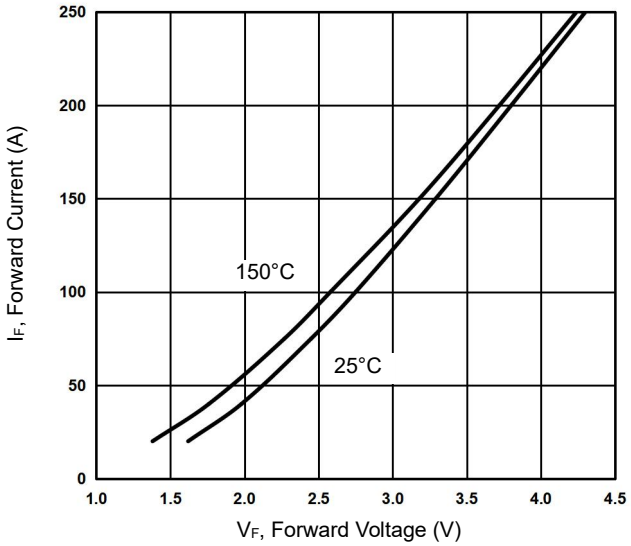

Figure 8 V_F vs. Temperature

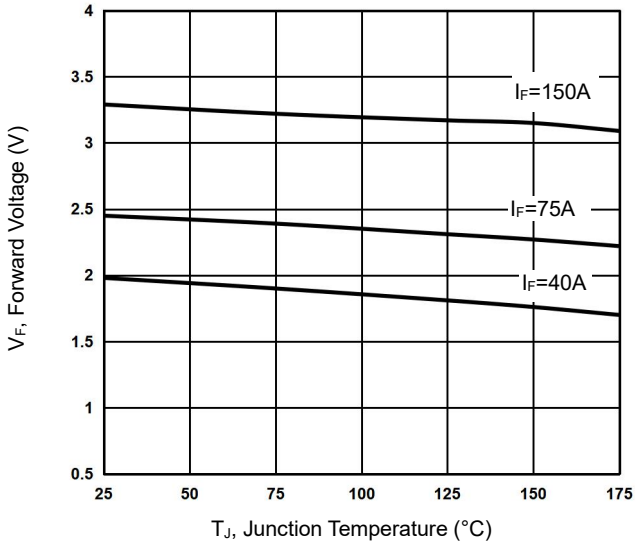

Figure 9 $V_{(BR)CES}$ vs. Temperature

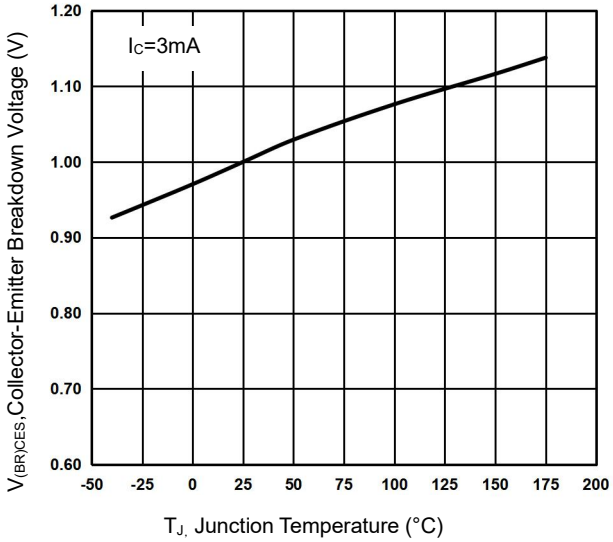

Figure 10 Forward Bias Safe Operating Area

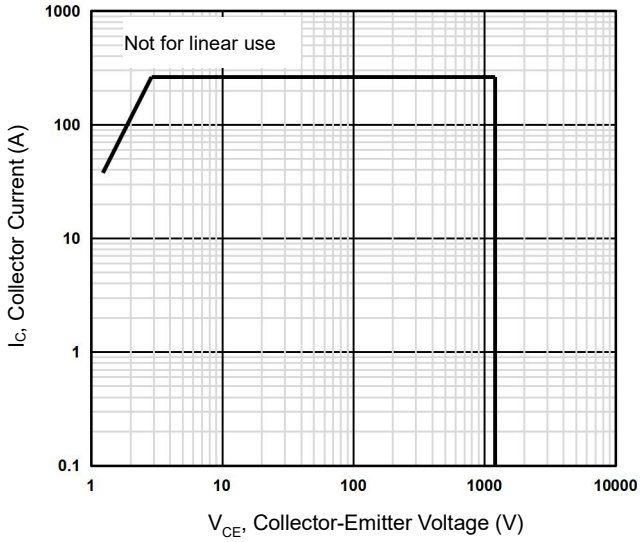

Figure 11 $V_{GE(th)}$ vs. Junction Temperature

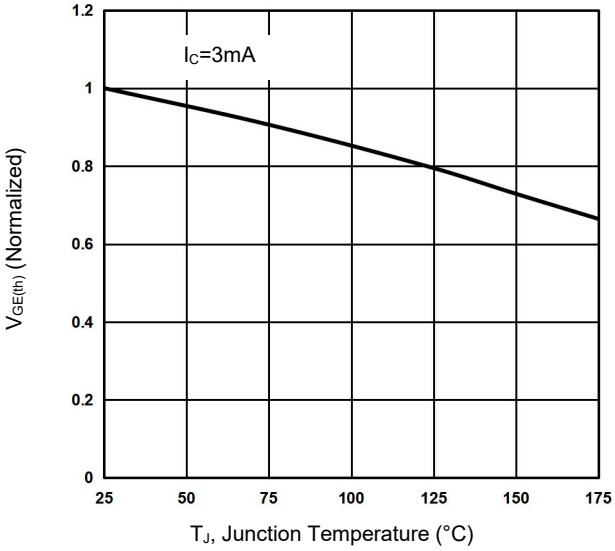

Figure 12 P_{tot} vs. Case Temperature

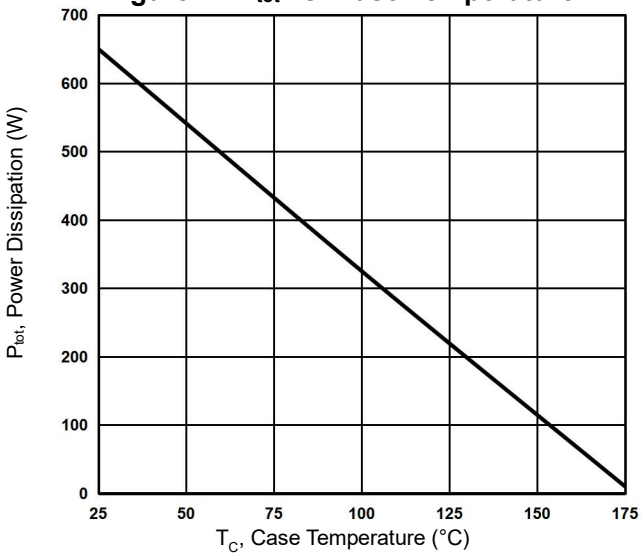

TO-247P-4L (B) Package Information

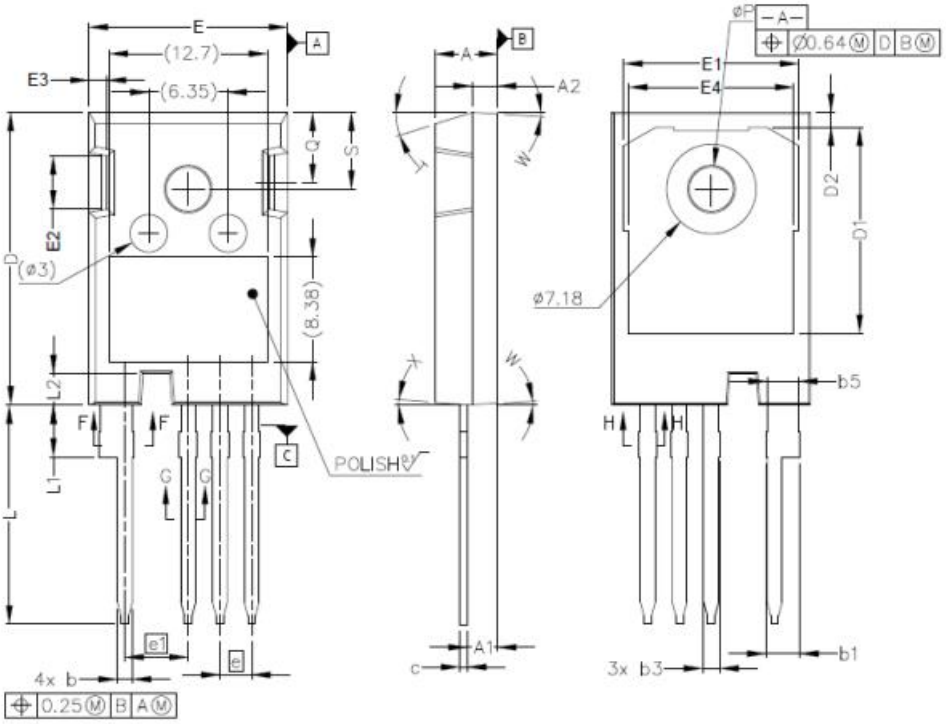

Symbol	Dimensions In Millimeters		Dimensions In Inches	
	Min.	Max.	Min.	Max.
A	4.83	5.21	0.19	0.21
A1	2.29	2.54	0.09	0.10
A2	1.91	2.16	0.08	0.09
b'	1.07	1.28	0.04	0.05
b	1.07	1.33	0.04	0.05
b1	2.39	3.94	0.09	0.16
b2	2.39	2.84	0.09	0.11
b3	1.07	1.60	0.04	0.06
b4	1.07	1.50	0.04	0.06
b5	2.39	2.69	0.09	0.11
b6	2.39	2.64	0.09	0.10
c'	0.55	0.65	0.02	0.03
c	0.55	0.68	0.02	0.03
D	23.30	23.60	0.92	0.93
D1	16.25	17.65	0.64	0.69
D2	0.95	1.25	0.04	0.05
E	15.75	16.13	0.62	0.64
E1	13.10	14.15	0.52	0.56
E2	3.68	5.10	0.14	0.20

E3	1.00	1.90	0.04	0.07
E4	12.38	13.43	0.49	0.53
e	2.54 BSC		0.10 BSC	
e1	5.08 BSC		0.20 BSC	
N	4		0.16	
L	17.31	17.82	0.78	0.83
L1	3.97	4.37	0.15	0.17
L2	2.35	2.65	0.1	0.11
ØP	3.51	3.65	0.09	0.1
Q	5.49	6	0.07	0.08
S	6.04	6.3	0.07	0.08
T	17.5° REF			
W	3.5° REF			
X	4.0° REF			

Attention:

- Any and all NCE power products described or contained herein do not have specifications that can handle applications that require extremely high levels of reliability, such as life-support systems, aircraft's control systems, or other applications whose failure can be reasonably expected to result in serious physical and/or material damage. Consult with your NCE power representative nearest you before using any NCE power products described or contained herein in such applications.
- NCE power assumes no responsibility for equipment failures that result from using products at values that exceed, even momentarily, rated values (such as maximum ratings, operating condition ranges, or other parameters) listed in products specifications of any and all NCE power products described or contained herein.
- Specifications of any and all NCE power products described or contained herein stipulate the performance, characteristics, and functions of the described products in the independent state, and are not guarantees of the performance, characteristics, and functions of the described products as mounted in the customer's products or equipment. To verify symptoms and states that cannot be evaluated in an independent device, the customer should always evaluate and test devices mounted in the customer's products or equipment.
- NCE power Semiconductor CO.,LTD. strives to supply high-quality high-reliability products. However, any and all semiconductor products fail with some probability. It is possible that these probabilistic failures could give rise to accidents or events that could endanger human lives, that could give rise to smoke or fire, or that could cause damage to other property. When designing equipment, adopt safety measures so that these kinds of accidents or events cannot occur. Such measures include but are not limited to protective circuits and error prevention circuits for safe design, redundant design, and structural design.
- In the event that any or all NCE power products(including technical data, services) described or contained herein are controlled under any of applicable local export control laws and regulations, such products must not be exported without obtaining the export license from the authorities concerned in accordance with the above law.
- No part of this publication may be reproduced or transmitted in any form or by any means, electronic or mechanical, including photocopying and recording, or any information storage or retrieval system, or otherwise, without the prior written permission of NCE power Semiconductor CO.,LTD.
- Information (including circuit diagrams and circuit parameters) herein is for example only ; it is not guaranteed for volume production. NCE power believes information herein is accurate and reliable, but no guarantees are made or implied regarding its use or any infringements of intellectual property rights or other rights of third parties.
- Any and all information described or contained herein are subject to change without notice due to product/technology improvement, etc. When designing equipment, refer to the "Delivery Specification" for the NCE power product that you intend to use.
- This catalog provides information as of Sep.2010. Specifications and information herein are subject to change without notice.